TEST NAME: **Sound/Light/Waves**
TEST ID: **194728**
GRADE: **06**
SUBJECT: **Life and Physical Sciences**
TEST CATEGORY: **School Assessment**

Student:

Class:

Date:

1. **Tectonic activity causes potential energy to build up in the crust. An earthquake occurs when this potential energy is released within the crust. Which statement best describes what happens when the energy is released?**

   A. It generates seismic waves that spread out in all directions around Earth.
   B. It generates heat waves that affect climate changes around Earth.
   C. It generates changes in the magnetic field of Earth.
   D. It generates changes in the orbiting speed of Earth.

2. **Which of these colors of visible light has the shortest wavelength?**

   A. red
   B. green
   C. violet
   D. yellow

3. **The visible light spectrum can be subdivided according to**

   A. the types of waves.
   B. the sizes of particles.
   C. a range of colors.
   D. a type of energy.

4. **On the electromagnetic spectrum shown, which numbered position represents where the visible light spectrum is found?**

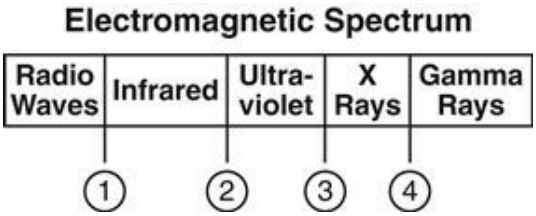

   A. 1
   B. 2
   C. 3
   D. 4

5. **The diagram below shows waves that are**

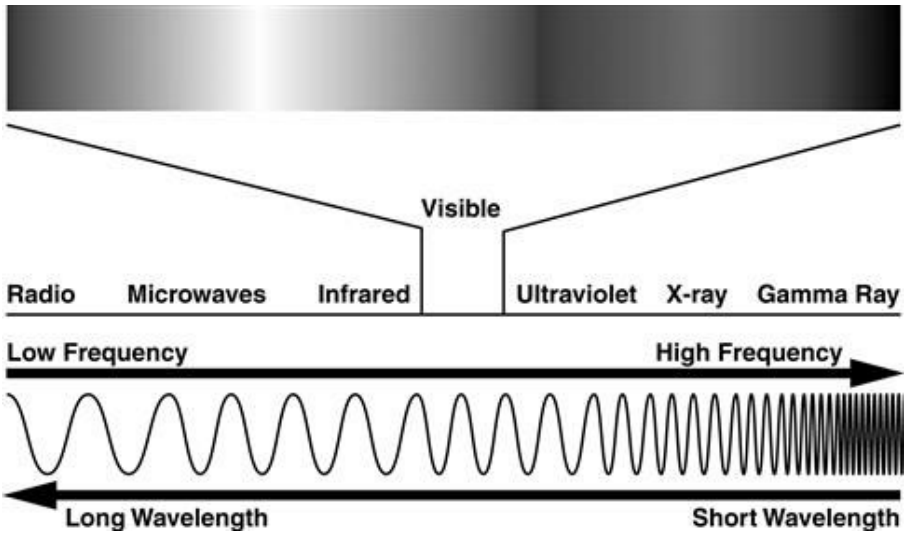

A. seismic.
B. mechanical.
C. longitudinal.
D. electromagnetic.

6. **Students heated three objects to different temperatures during a classroom demonstration. Each object emitted light of a different color as shown below.**

Object 1: blue light
Object 2: red light
Object 3: orange light

Which list presents the objects in order from highest to lowest temperature?

A. Object 1, Object 2, Object 3
B. Object 1, Object 3, Object 2
C. Object 2, Object 1, Object 3
D. Object 2, Object 3, Object 1

7. **Which of these describes a small range in the electromagnetic spectrum?**

A. gravity
B. radiation
C. electricity
D. light

8. **Visible light is which type of wave?**

A. seismic
B. mechanical
C. longitudinal
D. electromagnetic

9. **Scientists use large optical telescopes to obtain information about the planets in the solar system. What wavelengths of electromagnetic radiation provide this information?**

   A. gamma radiation
   B. infrared radiation
   C. radio waves
   D. visible light

10. **When scientists talk about white light, they are most likely referring to light that is**

   A. a combination of all of the colors in the visible region of the electromagnetic spectrum.
   B. the unabsorbed refracted light produced by a black light.
   C. the narrow band corresponding to white light in the electromagnetic spectrum.
   D. a combination of all the types of electromagnetic radiation.

11. **Light waves are arranged in the electromagnetic spectrum by**

   A. wavelength and brightness.
   B. speed and color.
   C. brightness and color.
   D. wavelength and frequency.

12. **During an earthquake, three types of waves are created. All three waves arrive at a seismograph station at different times because**

   A. waves have numerous collisions with objects.
   B. waves have a difficult time traveling through Earth.
   C. waves slow down as they pass from one rock type to another.
   D. waves travel through different substances at different rates of speed.

13. **Snapping a rubber band most likely produces which type of energy?**

   A. heat energy
   B. light energy
   C. sound energy
   D. electrical energy

14. **The most likely reason sound travels faster in saltwater than in freshwater is that saltwater**

   A. is more elastic.
   B. absorbs heat faster.
   C. has a higher density.
   D. reflects sound better.

15. **Which of the following has the greatest effect on the speed at which sound travels through a gas?**

   A. the ability of electrons to travel through a medium
   B. the frequency of the wave
   C. the amplitude of the wave
   D. the proximity of the molecules of the medium

16. **During a science investigation on the effect of media changes on light waves, a teacher places a straw above a beaker of water. The teacher explains that she is going to lower the straw vertically into the water.**

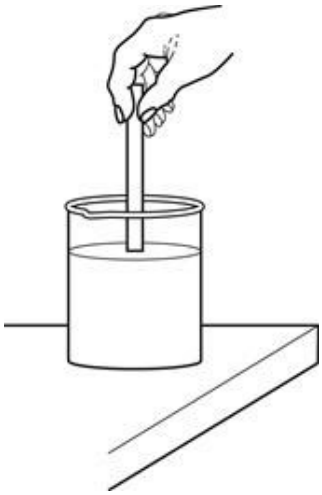

Which illustration best represents the effect of media changes as the straw is lowered vertically into the water?

A.

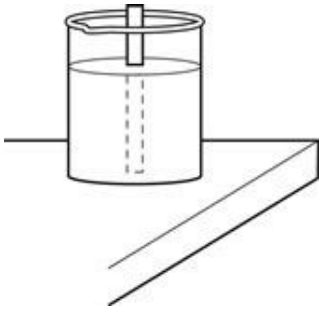

B.

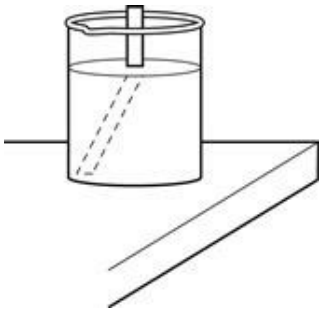

C.

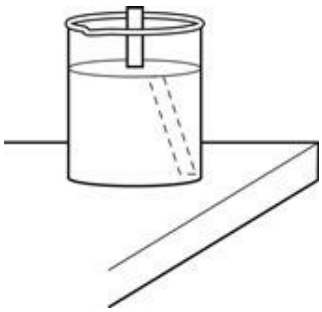

D.

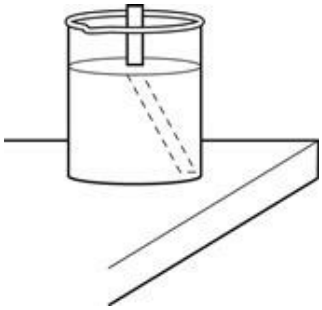

17. **Zachary studies sound waves traveling through different substances. In what way does a sound wave change when it travels out of water and through wood?**

A. It becomes louder.
B. Its speed increases.
C. It becomes stronger.
D. Its temperature decreases.

18. **When a compression wave travels through a medium, in what direction is the medium displaced?**

A. upward
B. downward
C. in the same direction
D. in the opposite direction

19. **Which part of a sound wave measures loudness?**

A. wavelength
B. magnitude
C. amplitude
D. frequency

20. **Sound will travel fastest through which substance?**

A. air
B. iron
C. helium
D. water

21. **Tuning forks make a sound when they are struck or hit. The tuning forks shown are labeled with the frequency of the sound they produce.**

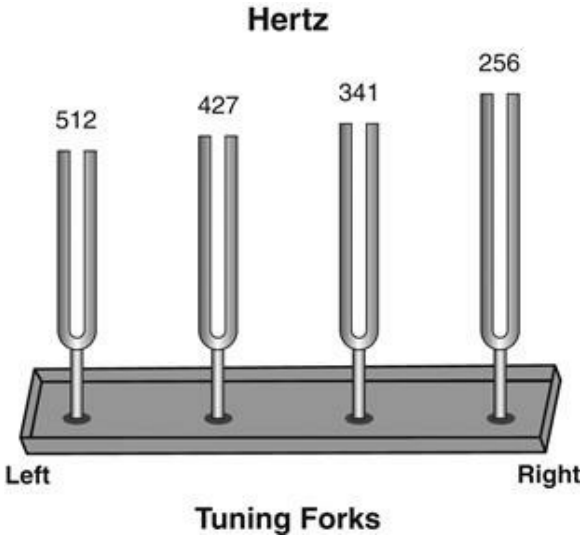

Moving from left to right, each tuning fork is struck one at a time. The same amount of force is used to strike each fork. What change in the sounds will be observed?

A. The speed of the sounds will decrease.
B. The volume of the sounds will increase.
C. The pitch of the sounds will become lower.
D. The pitch of the sounds will become higher.

22. **Sound is able to travel faster in solids than in air because the molecules in a solid are**

A. closer together than air molecules.
B. more easily moved than air molecules.
C. moving faster than air molecules.
D. larger than air molecules.

23. **A fifth-grade student fastened a piece of cardboard to his bicycle wheel so that the spokes would cause the card to vibrate. When the student rode the bike fast, the student heard a high pitch. When the student rode the bike slowly, the student heard a low pitch. Which best explains why the student heard both high and low pitches from the cardboard?**

A. The vibrations were faster when the student rode slowly.
B. The vibrations were slower when the student rode faster.
C. The cardboard vibrated at the same speed.
D. The cardboard vibrated at different speeds.

24. **A student tightened a string on a guitar while playing. The sound changed because**

A. the volume increased.
B. the rate of vibration increased.
C. the pitch decreased.
D. the velocity decreased.

25. **Margot learned that sound waves travel at different speeds through different materials. She also learned that sound waves cannot travel through outer space at all. Which best explains why sound waves cannot travel through space?**

A. Space is too cold.
B. Gravity is too strong.
C. Particles of matter are too far apart.
D. Energy from the Sun is too powerful.